DIAS Infrared Systems

PYROSPOT DT 44L/DT 44LH

Pyrometers for Industrial Applications

- **Digital pyrometers for –40 °C to 1000 °C**
- **Integrated LED aiming light**
- **RS485 interface for bus system integration**
- **Short response time from 10 ms**
- **Stainless steel housing**

The digital pyrometers PYROSPOT DT 44L are especially designed for industrial purpose.

The devices are suitable for temperature measurement from –40 °C to 1000 °C of many different non-metallic or coated metallic surfaces.

The solid body in stainless steel housing allows usage even under rough environmental conditions.

With a fast response time of only 10 ms (t95) these pyrometers are also suitable for fast measuring processes.

Several fixed optic types realise measuring field diameters from 2.0 mm.

The optional integrated green LED aiming light allows exact alignment to the measuring object. The LED size is identical to measuring spot size and visible even at high temperatures.

The temperature linear standard output signal of 0/4 to 20 mA allows easy implementation in existing measuring and controlling systems.

The devices are equipped with integrated, galvanically isolated RS485 interface, which allows parameterizing and software evaluation even in bus systems.

Via an USB module parameters like emissivity sub range, response time and storage can be easily adjusted by using the comfortable parameterizing and evaluation software PYROSOFT Spot.

Typical application areas:

- Glass and ceramic industry
- Paper and packaging industry
- Furnace applications
- Chemical industry
- Food industry

Technical Data and Accessories

Technical data				
Type	**DT 44L**	**DT 44LH**	**DT 44L**	**DT 44LH**
Temperature range	–40 °C to 1000 °C	–40 °C to 1000 °C	0 °C to 1000 °C	0 °C to 1000 °C
Sub temperature range	adjustable within temperature range, minimum span 51 °C			
Spectral range	8 μm to 14 μm			
Optics	several fixed optics (type V, VI, VII and VIII), aperture diameter 15 mm			
Distance ratio	50 : 1			
Measurement uncertainty	0.6 % of meas. value or 1 K (T_{amb} = 23 °C, ε = 1, t95 = 1s)			
Reproducibility	0.3 % of meas. value or 1 K (T_{amb} = 23 °C, ε = 1, t95 = 1s)			
NETD[1]	0.1 °C (T_{amb} = 23 °C, ε = 1, t95 = 1s)			
Response time (t95)	30 ms	10 ms	30 ms	10 ms
	adjustable up to 100 s			
Emissivity	0.200 to 1.000, adjustable via interface			
Storage	maximum or minimum value storage, adjustable via interface			
Output	0/4 to 20 mA, adjustable via software, temperature linear, max. burden: 500 Ω			
Interface	galvanically isolated RS485 interface, half duplex, max. 115 kBd			
Aiming	none or red laser aiming light[2]		none or integrated green LED aiming light[3]	
Software	PYROSOFT Spot for Windows®			
Parameters	emissivity, response time, temperature unit °C or °F, storage, sub range, adjustable via interface and software			
Power supply	24 V DC ± 25 %			
Power consumption	max. 1.5 W			
Operating temperature	0 °C to 70 °C			
Storage temperature	–20 °C to 70 °C			
Weight	approx. 395 g			
Dimensions	thread M40 × 1.5, length 125 mm			
Housing	stainless steel with plug connector			
Safety class	IP 65 (DIN 40 050)			
CE symbol	according to EU regulations (EN 50 011)			
Scope of delivery	PYROSPOT DT 44L or DT 44LH, manual, inspection sheet, PYROSOFT Spot for Windows® (**without** connecting cable, please order separately)			

[1] Noise equivalent temperature difference. [2] Laser aiming light as accessory. [3] LED aiming light as option.

Accessories, mechanical, electrical and optical[1]	
Connecting cable 12-pin	length 2 m, 5 m, 10 m, 15 m, 20 m, 25 m or 30 m
Interface module	RS485 to USB
Power supply	24 V DC, 0.6 A
Mounting angle	fixed or adjustable
Air purge unit	stainless steel, air pressure 0.1 to 0.5 bar, oil free
Water cooling jacket	with integrated air purge and mounting angle
Vacuum flange	KF 16 with ZnSe window
Laser pilot light	adapter

[1] Other accessories on request.

Contact: info@dias-infrared.de

Optics Types V, VI, VII and VIII

Optics V (sharp point at a = 100 mm measuring distance)							
Measuring distance a in mm	0	50	**100**	150	200	250	300
Measuring field diameter M in mm							
DT 44L (–40 °C to 1000 °C)	15.0	8.5	**2.0**	10.5	19.0	27.5	36.0
DT 44LH (–40 °C to 1000 °C)	15.0	8.5	**2.0**	10.5	19.0	27.5	36.0
DT 44L (0 °C to 1000 °C)	15.0	8.5	**2.0**	10.5	19.0	27.5	36.0
DT 44LH (0 °C to 1000 °C)	15.0	8.5	**2.0**	10.5	19.0	27.5	36.0

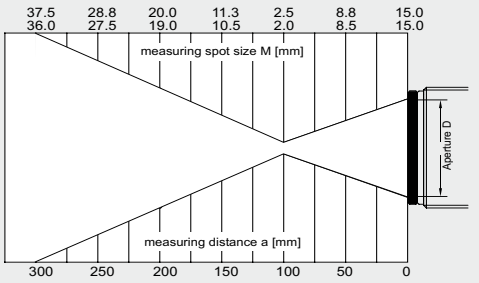

Optics VI (sharp point at a = 300 mm measuring distance)							
Measuring distance a in mm	0	100	200	**300**	400	500	600
Measuring field diameter M in mm							
DT 44L (–40 °C to 1000 °C)	15.0	12.0	9.0	**6.0**	13.0	20.0	27.0
DT 44LH (–40 °C to 1000 °C)	15.0	12.0	9.0	**6.0**	13.0	20.0	27.0
DT 44L (0 °C to 1000 °C)	15.0	12.0	9.0	**6.0**	13.0	20.0	27.0
DT 44LH (0 °C to 1000 °C)	15.0	12.0	9.0	**6.0**	13.0	20.0	27.0

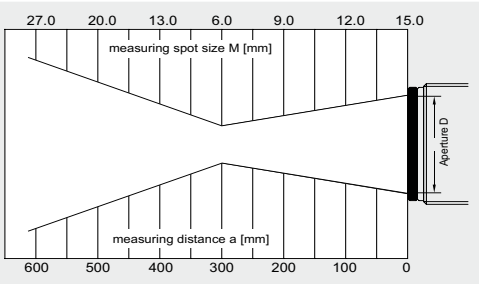

Optics VII (sharp point at a = 800 mm measuring distance)							
Measuring distance a in mm	0	200	400	600	**800**	1000	1200
Measuring field diameter M in mm							
DT 44L (–40 °C to 1000 °C)	15.0	15.3	15.5	15.8	**16.0**	23.8	31.5
DT 44LH (–40 °C to 1000 °C)	15.0	15.3	15.5	15.8	**16.0**	23.8	31.5
DT 44L (0 °C to 1000 °C)	15.0	15.3	15.5	15.8	**16.0**	23.8	31.5
DT 44LH (0 °C to 1000 °C)	15.0	15.3	15.5	15.8	**16.0**	23.8	31.5

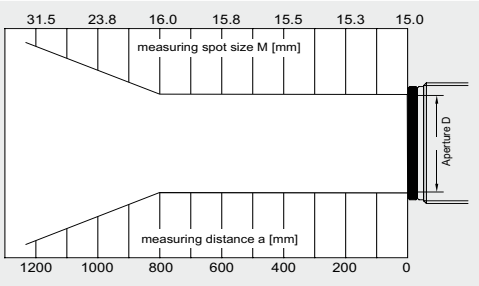

Optics VIII (sharp point at a = 1200 mm measuring distance)							
Measuring distance a in mm	0	100	300	600	900	**1200**	1500
Measuring field diameter M in mm							
DT 44L (–40 °C to 1000 °C)	15.0	15.0	16.5	18.8	21.0	**24.0**	33.8
DT 44LH (–40 °C to 1000 °C)	15.0	15.0	16.5	18.8	21.0	**24.0**	33.8
DT 44L (0 °C to 1000 °C)	15.0	15.0	16.5	18.8	21.0	**24.0**	33.8
DT 44LH (0 °C to 1000 °C)	15.0	15.0	16.5	18.8	21.0	**24.0**	33.8

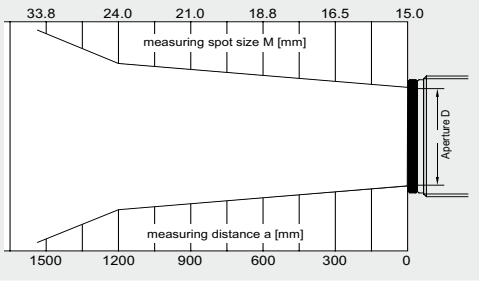

Measuring field calculation

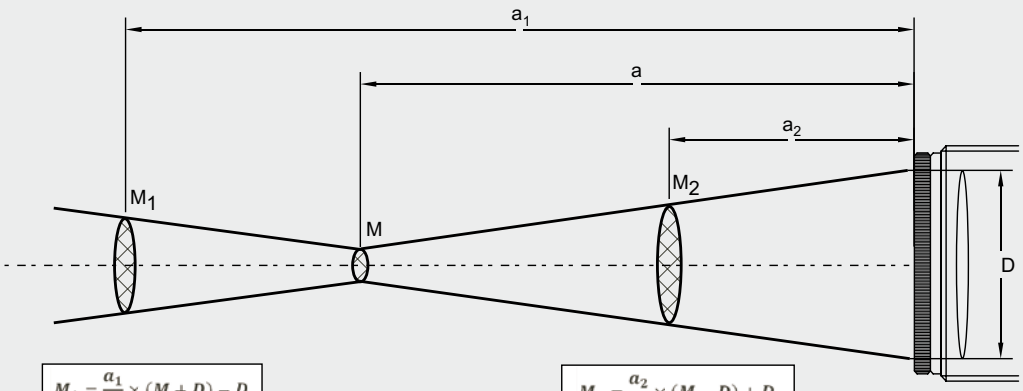

$$M_1 = \frac{a_1}{a} \times (M + D) - D$$

$$M_2 = \frac{a_2}{a} \times (M - D) + D$$

Further information: www.dias-infrared.com

Dimensions and Accessories

Dimensions pyrometer

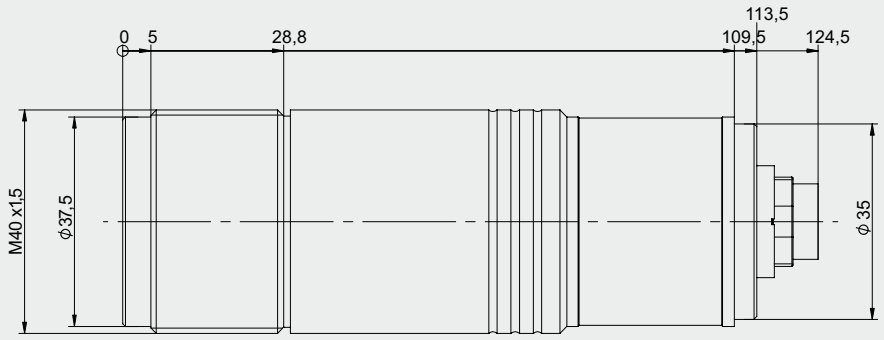

Accessories

Mounting angle, adjustable

Window slide

Cooling jacket with air purge and mounting angle

Air purge unit

Digital displays DD 200 and DD 210

Power supply

Technical details are subject to change without notice. August 2010.

DIAS Infrared GmbH · Gostritzer Straße 65 · D-01217 Dresden · Germany

phone: +49 351 8717228 · fax: +49 351 8717230
e-mail: info@dias-infrared.de · internet: www.dias-infrared.com